Caution! DO NOT Stare Into LED Beam
96mm

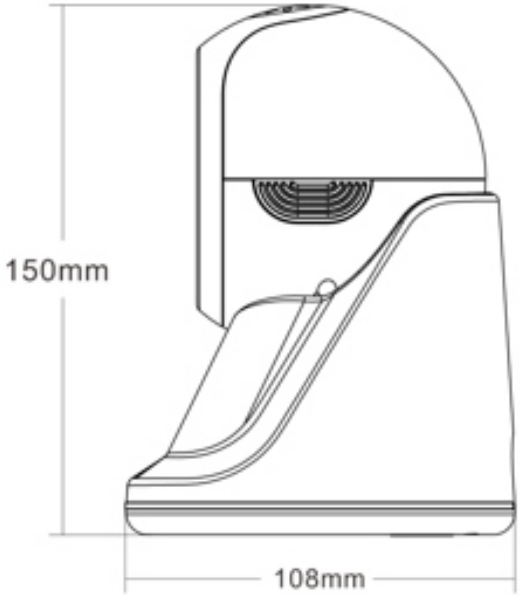
150mm
108mm

Caution! DO NOT Stare